# ASSEMBLY DIAGRAM
# (Product Code: PFB1 2600)

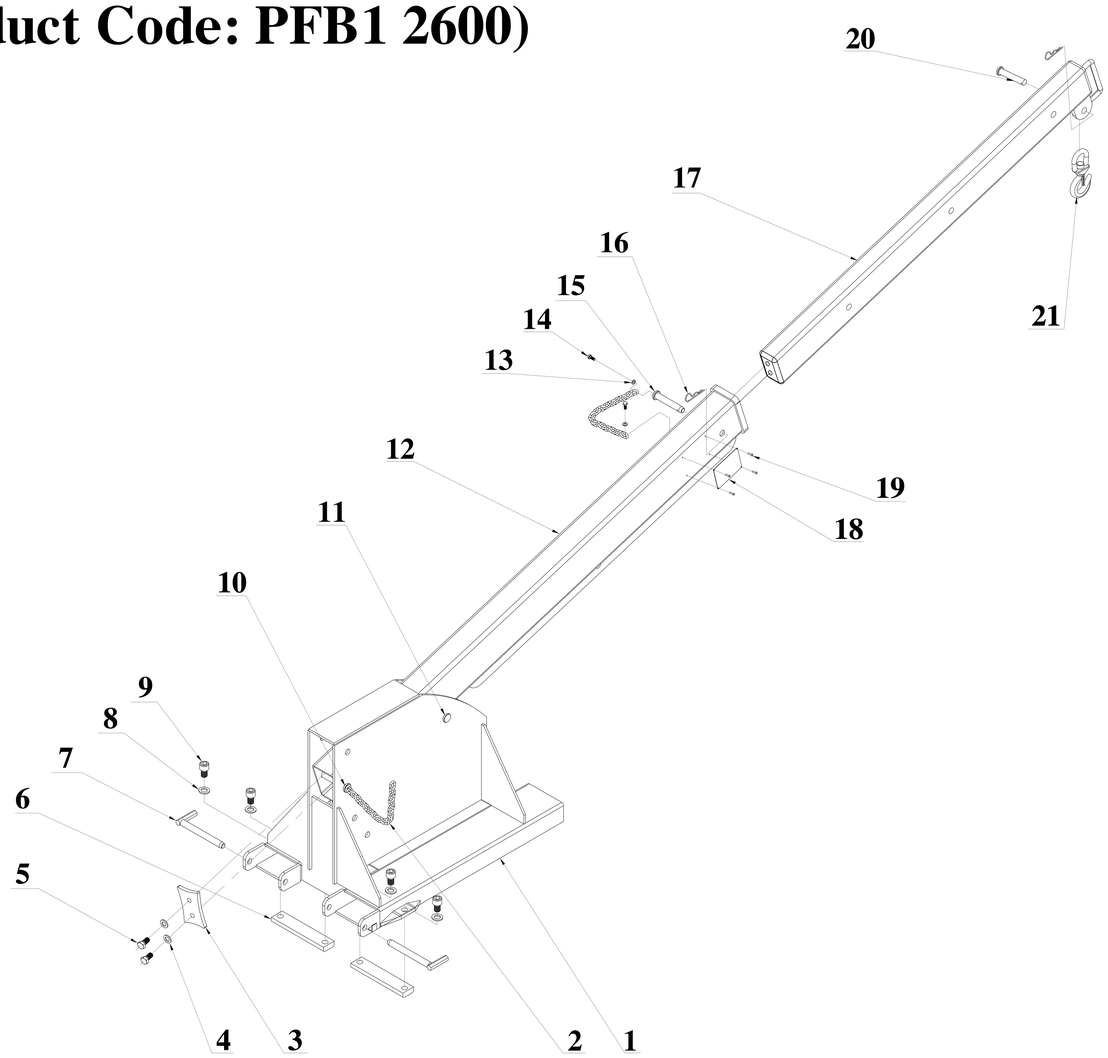


## PARTS LIST

| CODE | POSITION | DESCRIPTION | QTY |
|---|---|---|---|
| PFB1- 001 | 1 | Base | 01 |
| PFB1 - 002 | 2 | Chain Ø6 x 300 | 02 |
| PFB1 - 003 | 3 | Flange | 01 |
| PFB1 - 004 | 4 | Washers Ø16 | 02 |
| PFB1 - 005 | 5 | Hexagon Bolt M16 x 30 | 02 |
| PFB1 - 006 | 6 | Adjust Bar | 02 |
| PFB1 - 007 | 7 | Hexagon Pin | 02 |
| PFB1 - 008 | 8 | Washers Ø20 | 04 |
| PFB1 - 009 | 9 | Hexagon Socket Head Cap Screw M20 | 04 |
| PFB1 - 010 | 10 | Pin 1 | 01 |
| PFB1 - 011 | 11 | Pin 2 | 01 |
| PFB1 - 012 | 12 | Cross Bar | 01 |
| PFB1 - 013 | 13 | Washers Ø8 | 04 |
| PFB1 - 014 | 14 | Hexagon Bolt M8 x 30 | 04 |
| PFB1 - 015 | 15 | Pin 3 | 01 |
| PFB1 - 016 | 16 | Cotter Pins | 03 |
| PFB1 - 017 | 17 | Slide Bar | 01 |
| PFB1 - 018 | 18 | Label | 01 |
| PFB1 - 019 | 19 | Pop Rivet | 04 |
| PFB1 - 020 | 20 | Pin 4 | 01 |
| PFB1 - 021 | 21 | Swivel Hook 3.0T (SH30T) | 01 |

Please note: When assembling match number on upright with number on base