'A' FRAME 2440QP
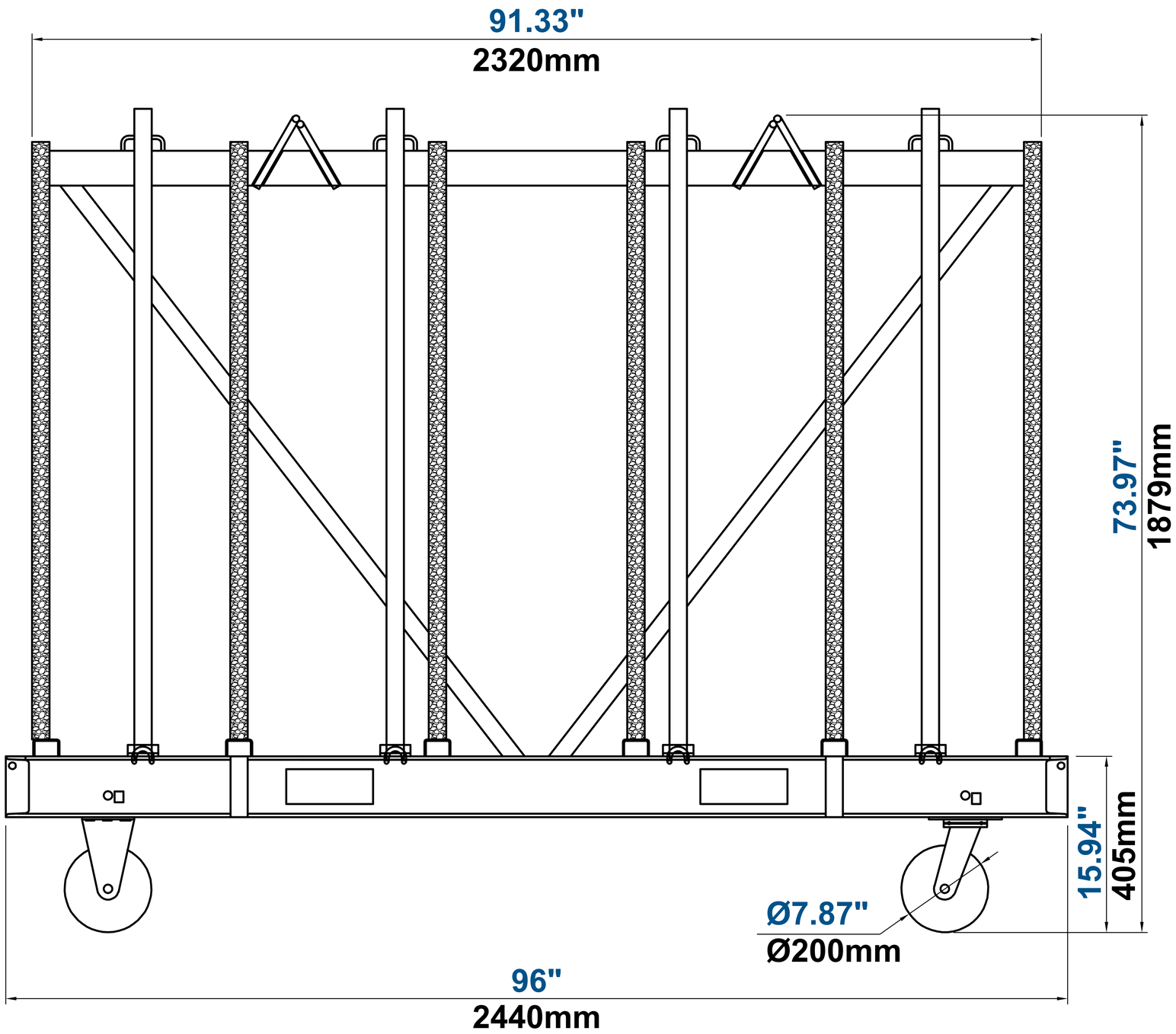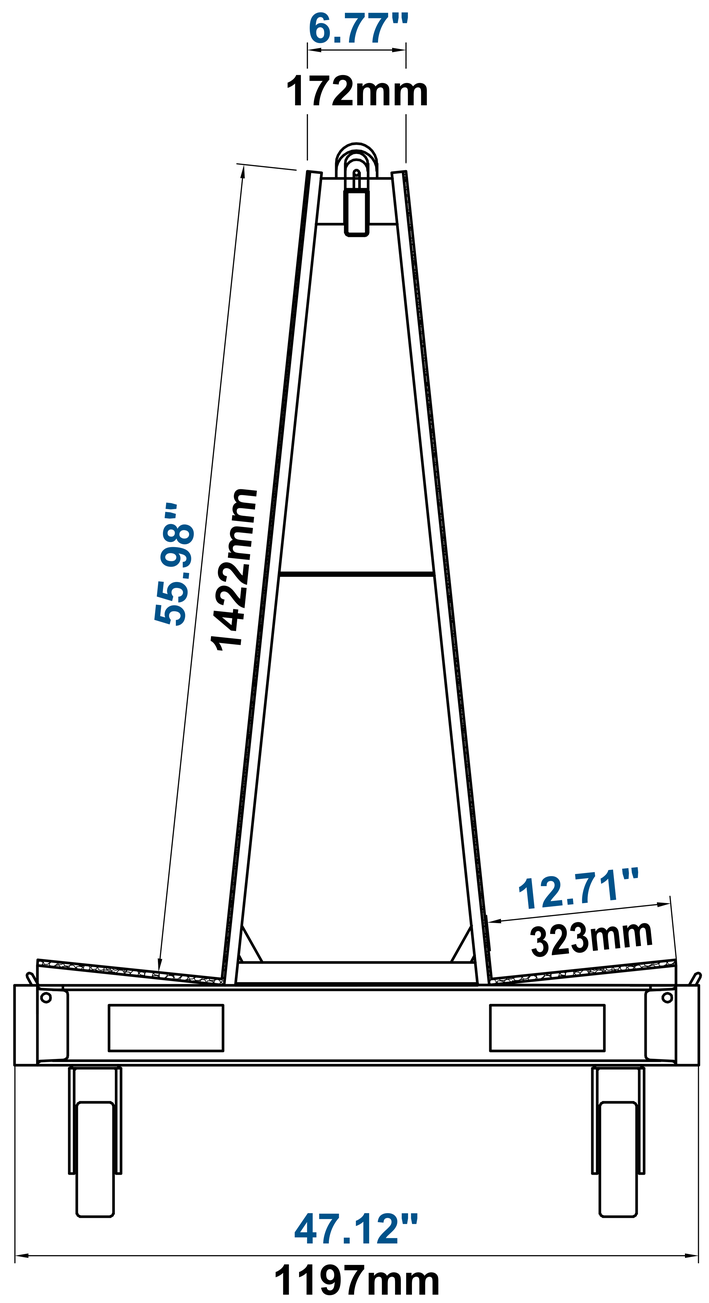
Product Code: AF2440QP