'A' FRAME 1850QP
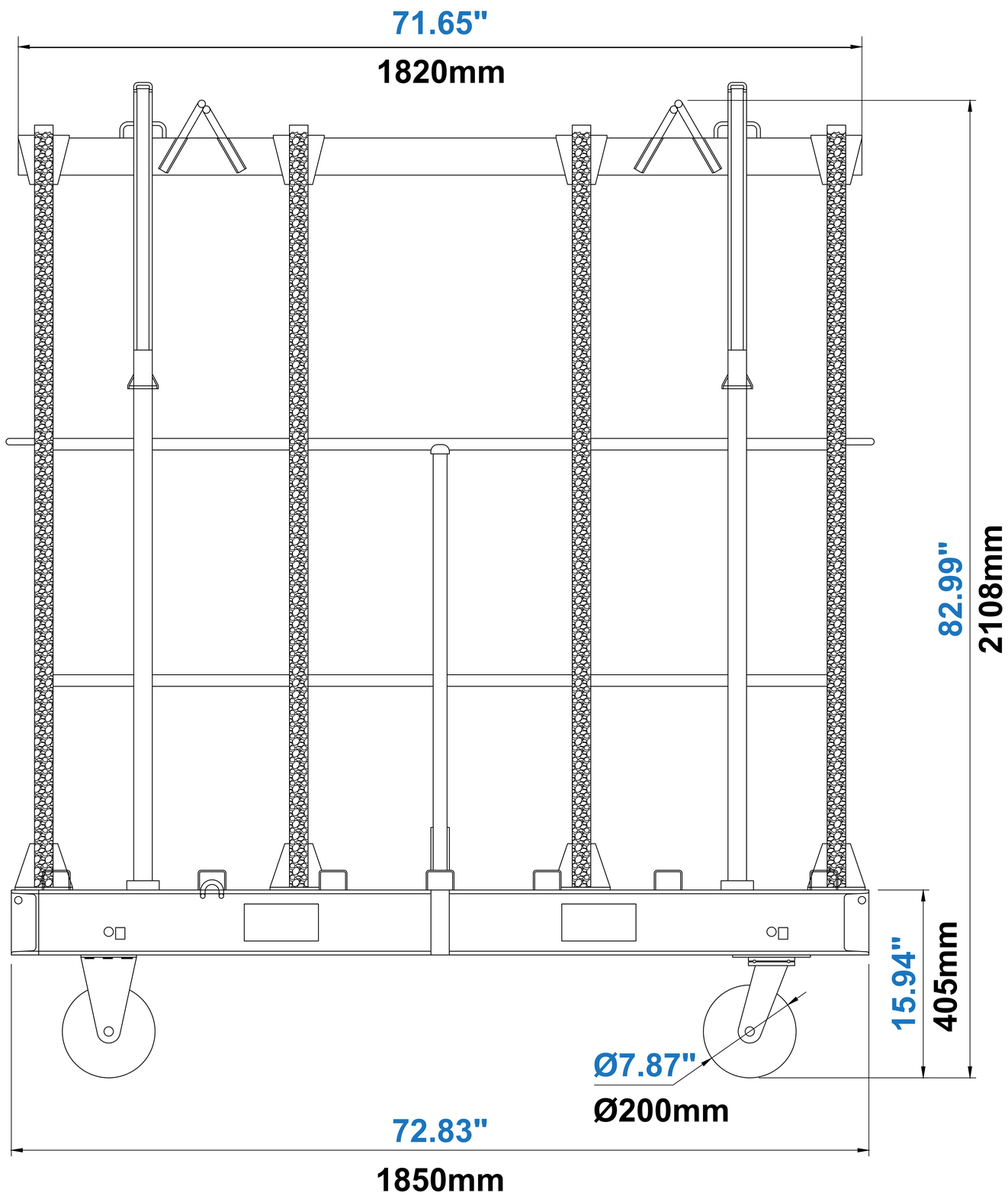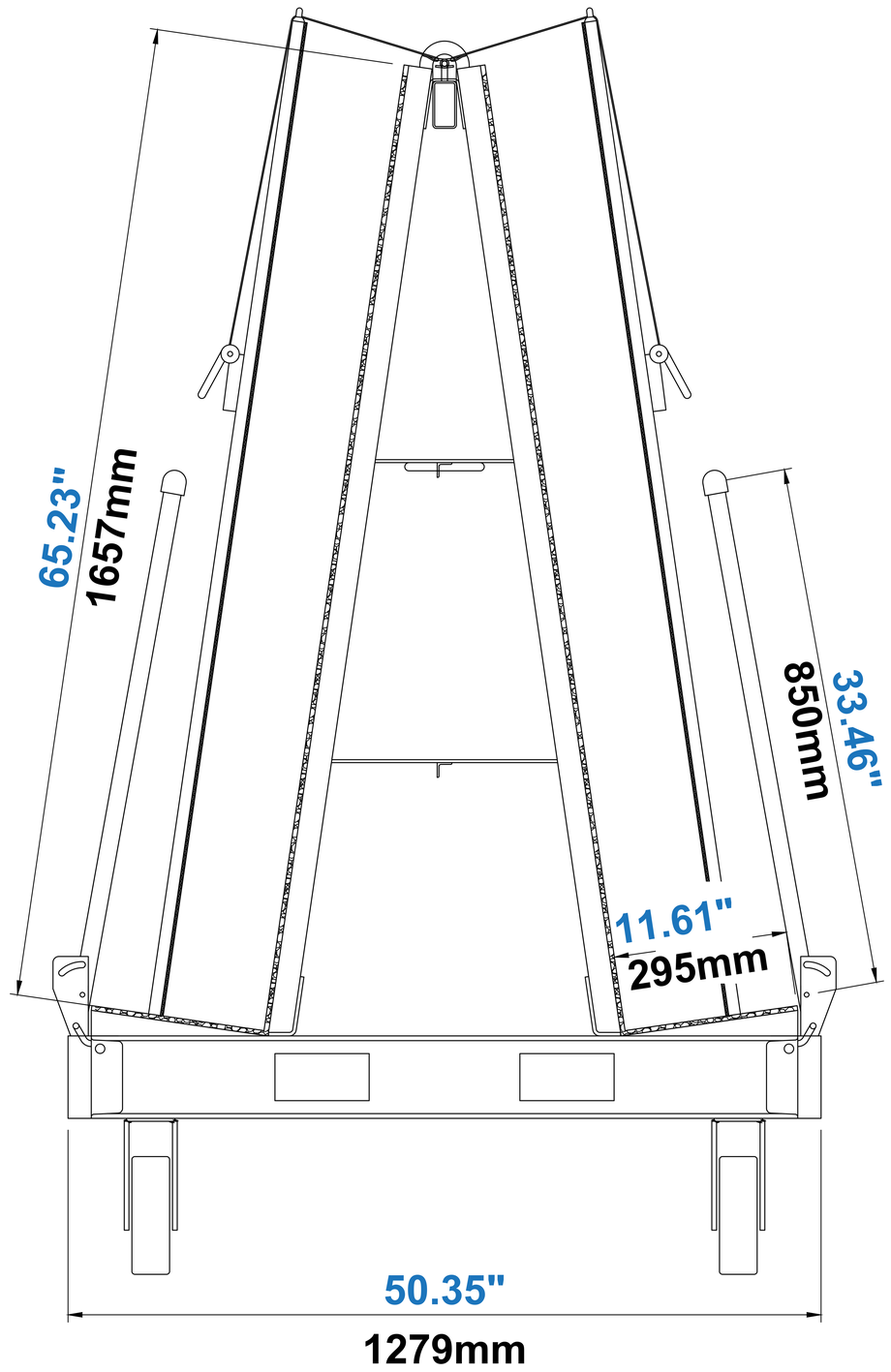
Product Code: AF1850QP